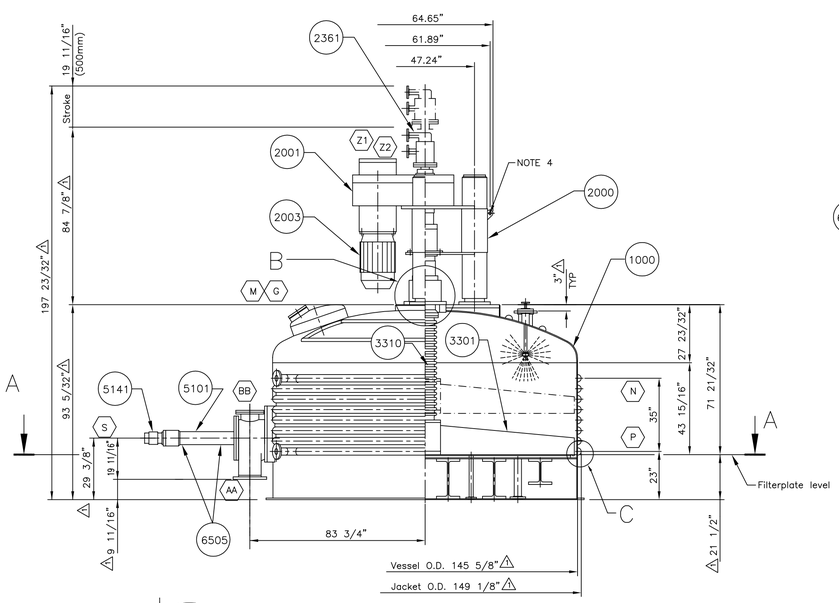

F3 Drive Unit

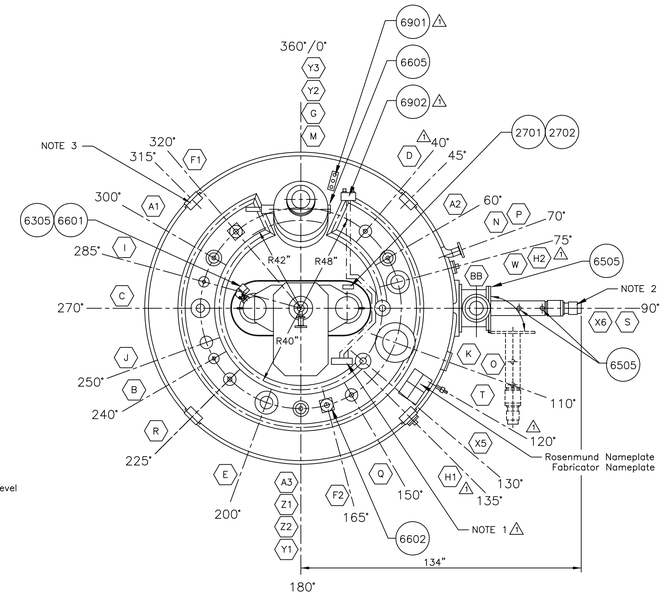

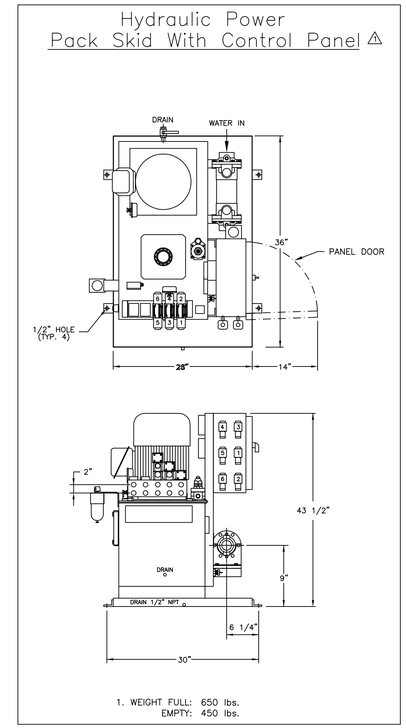

1. WEIGHT FULL: 650 lbs.
EMPTY: 450 lbs.

Filter Vessel Nozzle Schedule

ITEM	DESCRIPTION	SIZE	RATING	TYPE
A1–A3	Wash–spray balls	3"/1¼"	150#	RFSO
B	Pressure gas	1½"	150#	RFSO
C	Product inlet	3"	150#	RFSO
D	Pressure gauge	2"	150#	RFSO
E	Pressure relief	6"	150#	RFSO
F1–F2	Light connection	2"	150#	Pad
G	Sight glass	6"	150#	Pad
H1,H2	PBM Sample valve	2"		NPT
I	Balance line	1½"	150#	RFSO
J	Spare w/blind flange	4"	150#	RFSO
K	Dust filter	12"	150#	RFSO
L	Agitator support plate		RoAG	
M	Manway	26"	60#	Pfaudler
N	Side jacket out	3"	150#	RFSO
O	Slurry Port w/Contour Plug	4"	150#	Pad
P	Side jacket in	3"	150#	RFSO
Q	Vent	2"	150#	RFSO
R	MTBE/MEOH	2"	150#	RFSO
S	Side discharge valve, solids	16"	60#	Pad
T	Thermowell	½"		NPT
U1–U10	Filtrate openings in filterbase	1½"	150#	RFSO
W	Spare	6"	150#	RFSO
X1–X3	Base heating inlet	3"	150#	RFSO
X2–X4	Base heating outlet	3"	150#	RFSO
X5	Head jacket inlet	3"	150#	RFSO
X6	Head jacket outlet	3"	150#	RFSO

Agitator Nozzle Schedule

Y1–Y2	Mechanical seal purge connection	½"		NPT
Y3	Mechanical seal leakage	⅛"		NPT
Z1	Heated agitator inlet	2"	150#	RFSO
Z2	Heated agitator outlet	2"	150#	RFSO

Side Discharge Valve Nozzle Schedule

AA	Side discharge/solids discha. outlet	10"	150#	RFSO
BB	Clean out port with sight glass	8"	150#	RFSO

Dust Filter Nozzle Schedule

DD	Dust filter product inlet	12"	150#	RFSO
EE	Dust filter product outlet	6"	150#	RFSO
FF1,FF2	Pulsed jet inlet	1"	150#	RFSO
GG	Dust filter jacket inlet	1"	150#	RFSO
HH	Dust filter jacket outlet	1"	150#	RFSO
JJ1,JJ2	Dust filter differential pressure	½"		NPT

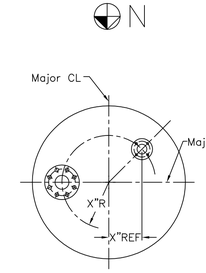

All bolt holes must straddle major center lines unless otherwise specified

PROCESS DATA

Filter surface area	m2	10.0	HEAT TRANSFER AREA		
Working volume	Gal	3100	Agitator	ft2	50
Max. cake volume	Gal	1407	Sidewall	ft2	64
			Filterbase	ft2	90

SERVICES REQUIRED

Air connection:	Instrument air 60–100psig (One on hydraulic pack)
Seal Nitrogen:	15psig above maximum operating pressure (Mechanical Seal Nozzle Y1)
Cooling water:	Flow rate 8–10 Gpm 40–60Psig (One in–and one outlet, on hydraulic pack)

DISCHARGE VALVE

Type:	Rosenmund	MATERIALS	
Valve model:	Metal to Metal Seats	Main body:	316L SS
Bore:	DN 400 (16")	Slide plate:	N/A
Housing pressure rating:	5 psig(non ASME code)	Spindle:	304 SS
Design temperature:	–20/+370°F	Seats:	316L SS/HC–22
Flanges:	ANSI 150#	O–Rings:	Chemraz
Actuator:	Hydraulic motor	Sensor:	P+F Type NJ5–18GM–N–V1
	Danfoss OMT 500	Hinged Access:	Yes
Internal finish:	Mill		

DUSTFILTER SPECIFICATION

		VESSEL	JACKET	MATERIALS	
Design pressure	Psig	60/FV	150/FV	Main Shell	316L SS
Design temperature	°F	–20/+370	–20/+370	Jacket	304L SS
Test pressure	Psig	Per code	Per code	Internal finish	Mill
ASME Code stamped		Yes	Yes	External finish	Glass Bead

DRIVE UNIT SPECIFICATION

Drive size:	10m2 F3 Drive stool	Max. Torque on Agitator:	50,000 NM
Driven by:	Electric motor	Internal parts made of:	316L SS
Gearbox:	TDHSF3	External parts made of:	Carbon steel
Drive Type:	N–Eupex B–140	External bolting:	ASTM A193 Gr. B8 A194 Gr.8 (304 SS)
Wetted parts finish:	Mill	Main shaft mechanical seal:	Duramettallic VRA/VRA
Stroke:	500mm (19 11/16")		w/316Ti: Bellows
Agitator:	3–arm heated "S–blade"	Finish external:	Mill
		Paint on Carbon steel:	Sherwin Williams Polane B
Design conditions:	145psig at –20°/370°F		N0.F63BXL2270–4373, color "blue"
Shaft diameter:	220mm	O–Rings product side:	Kalrez
HP motor:	40	O–Rings Atm side:	Viton
Speed of Agitator:	2.5 – 7.5 RPM	Rotary joint:	Maier DXSR–265

MOTOR INFORMATION

TYPE	HP	RPM	VOLTS	HERTZ	SPECIFICATION
Auxiliary Pack Motor:	5	1800	460	60	Class I, Div. I, Grp. C & D/ Class II, Div. I, Grp. E,F & G
Main Drive Motor:	40	1800	460	60	Class I, Div. I, Grp. C & D/ Class II, Div. II, Grp. E,F & G

VESSEL SPECIFICATION

		VESSEL	SIDE & HEAD/JACKET	SIMPLE HEATED BASE	AGITATOR
Design pressure max/min	Psig	60/FV	150/FV	150/FV	145/0
Design temperature max/min	°F	–20/+370	–20/+370	–20/+370	–20/+370
Test pressure	Psig	Per code	Per code	Per code	
ASME Code stamped		Yes	Yes	Yes	No

		MATERIALS	
Corrosion allowance:	None	Shell:	316L SS
Flanges:	ANSI	Dished head:	316L SS
Radiography:	1.0 Joint Eff. Per Code	Flat head:	316L SS
Seizmic zone:	0	Jacket:	304L SS
Internal finish:	Mill	Skirt:	304L SS
External finish:	Glass Bead	Internals:	316L SS
Manway:	Pfaudler Spring Assist	Body flange:	N/A
Wash system:	3 rotating PTFE sprayballs	Internal bolting:	HC–22
Spraying Systems Model No.	~~27500E–1–30–TEF~~	External bolting:	ASTM A193 Gr. B8 A194 Gr.8 (304 SS)
		Side lugs:	N/A
		O–Rings:	Chemraz
		Gasket:	N/A

Weight of filter, full	70,000 LBS	Weight of filter, empty	40,000 LBS
Customer P.O. No.	861312	Customer Ref. No.	9035RFQ–7
Rosenmund Inc. Sales No.	A97–RF–2078–02	Filter Serial No.	10–952–97

Client: BASF CORPORATION, BEAUMONT TX

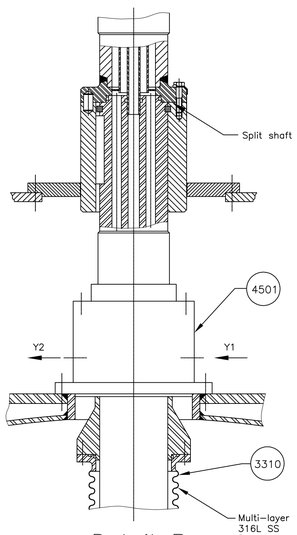

Detail B

VRA/VRA
Double mech. seal
(Dry running)

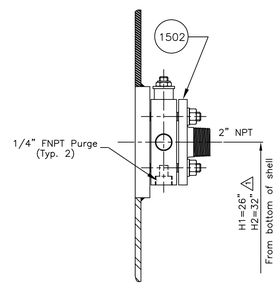

Detail nozzle H1,H2

PBM Sample Valve

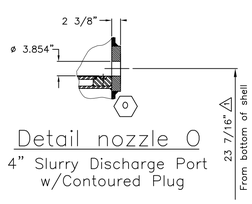

Detail nozzle O

4" Slurry Discharge Port
w/Contoured Plug

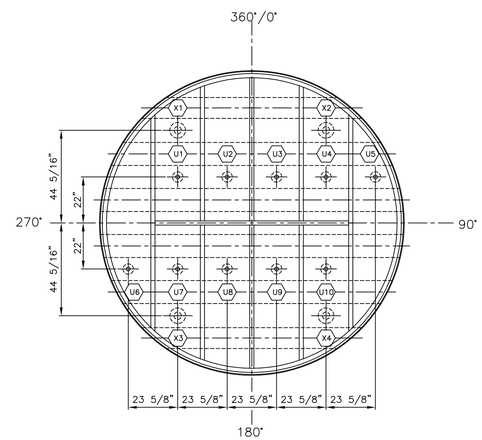

Filterbottom

Section A–A

(Simple heated filterplate)

C–877 Bill of Material

Item	Qty.	Description	Location
1000	1	10M² Filter–Dryer Vessel fabricated in 316L SS	
1501	1	Thermowell Assembly	
1502	2	PBM Half Ball Sample Valve – Reference PBM Drawing No. FTK–37–M2 FT37–97184A	
1503	As Needed	Clamping Bar Assembly	
1504	As Needed	Hex Head Cap Screw 0.3125 x 18NC x 0.75 in HC–22.	
1505	3	Spraying Systems 360° Rotating Teflon Spray Balls – Part No. 27500E–1–30–TEF	
2000	1	Rosenmund F3 Drive Stool – Reference Rosenmund Drawing No. 324.20227 B	
2001	1	Speiss TDGSF3 Gearbox	
2003	1	Reliance 40 Horsepower Electric Motor	F3 Drive Stool
2021	2	Hagenbuch Hydraulic Cylinders – Part No. ZMD 80/56/500	F3 Drive Stool
2361	1	Maier Brass Rotary Joint – Part No. DXSR 265 K–32 MB 6950	F3 Drive Stool
2701	1	500mm Graduated Scale	F3 Drive Stool
3301	1	Rosenmund 3–arm, Heated, S–Blade Agitator	
3310	1	Convoluted Bellows	F3 Drive Stool
4501	1	Durametallic VRA/VRA Dry Running Double Mechanical Seal	
5101	1	Rosenmund DN400 Side Discharge Valve – Reference Rosenmund Drawing No. 334.90196 B	
5141	1	Danfoss OMT 500 Hydraulic Motor	Side Discharge Valve
6305	6	Pepperl and Fuchs Proximity Sensors – Part No. NJ5–18GM–N–V1	F3 Drive Stool
6505	2	Pepperl and Fuchs Proximity Sensors (Open / Closed) – Part No. NJ5–18GM–N–V1	Side Discharge Valve
6601	1	United Electric Pressure Switch – Part No. H402–552–0140–M202	F3 Drive Stool
6602	2	J.M. Canty Vessel Lights – Part No. HVLB0–10EM–EXP–S–WB–2FL150–SS	
6603	2	ASCO Solenoid Valve – Part No. EF8210089	Dustfilter
6605	2	Pepperl and Fuchs Proximity Sensor – Part No. NJ5–18GM–N–V1	Manway/SDV
6901	1	Agitator Control Station – Reference Rosenmund Drawing No. 415–01–K4	
6902	1	Precision Dual Speed Flow Control Station – Reference Rosenmund Drawing No. 97–RF–415–H1	
7000	1	2.5M² Sock Dustfilter – Reference Mueller Drawing No. PC09769 C	
9001	1	20 Micron Poromet Multi–Layer Filter Media in 316L SS. 10 Segments per set.	
9002	1	3.5mm x 1.0mm Backing Screen with Edge Treatment in 316 SS. 10 Segments per set.	

Certifications

Filter Vessel ASME National Board No:	*
Dustfilter ASME National Board No:	*

NOTES:

1. Hydraulic Manifold : Two (2) 3/8" x 10' Hose
   37° JIC Fittings
2. Hydraulic Motor (Danfoss OMT 500) : Two (2) 1/2" x 10' Hose (3/4" Tubing)
   One (1) 3/8" x 10' Hose (1/2" Tubing)
   37° JIC Fittings
3. Four (4) 2" Diameter Lifting Lugs spaced 90° apart
4. Two (2) 1–1/4" Diameter Lifting Lugs
5. Temperature Element by Client

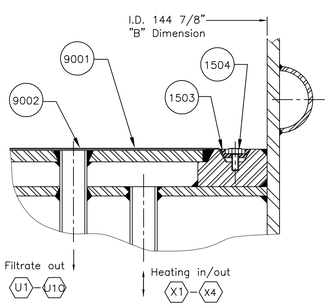

Filterplate Detail C

(Simple heated filterplate)

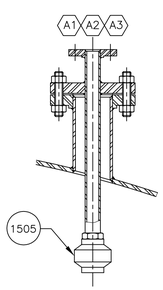

Detail Spray nozzle

(Nozzles A1–A3)

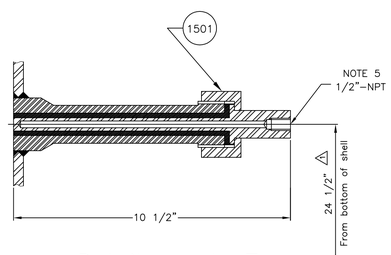

Detail nozzle T

(Thermowell)

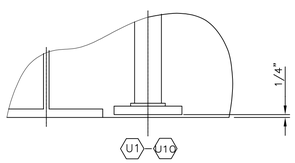

Detail D

The copyright for this drawing remains ours. The use of this drawing is strictly limited to the purposes we have agreed to in writing. It may neither be reproduced nor copied nor brought to any third party's notice without our written consent.
©Rosenmund, Inc., 1997

ROSENMUND, INC.
CHARLOTTE, N.C. 28273

AS–BUILT

SIGNED: _____

DATE: _____

THIS DRAWING WAS NOT ISSUED BY ROSENMUND INC. UNLESS IT IS STAMPED AND SIGNED.

NO.	REVISION	DATE	DRAWN	APPROV
1	As–built drawing	4/2/98	V.FURRER	RTP
A	Issued for approval	4/18/97	T. NAIL	RTP

ROSENMUND, INC.
CHEMICAL PROCESS EQUIPMENT

9110 FORSYTH PARK DRIVE
CHARLOTTE, NC 28273

For 10m2 Side Discharge Filter–Dryer (316L SS)

Dimensional drawing

TAG No: C–877

Scale	Drawn	4/18/97	T. NAIL
1/36"=1"	Checked		
DWG. NO.			REV.
97–RF–415			1

FILE NO. \FILTER\SIDEDIF\97rf415